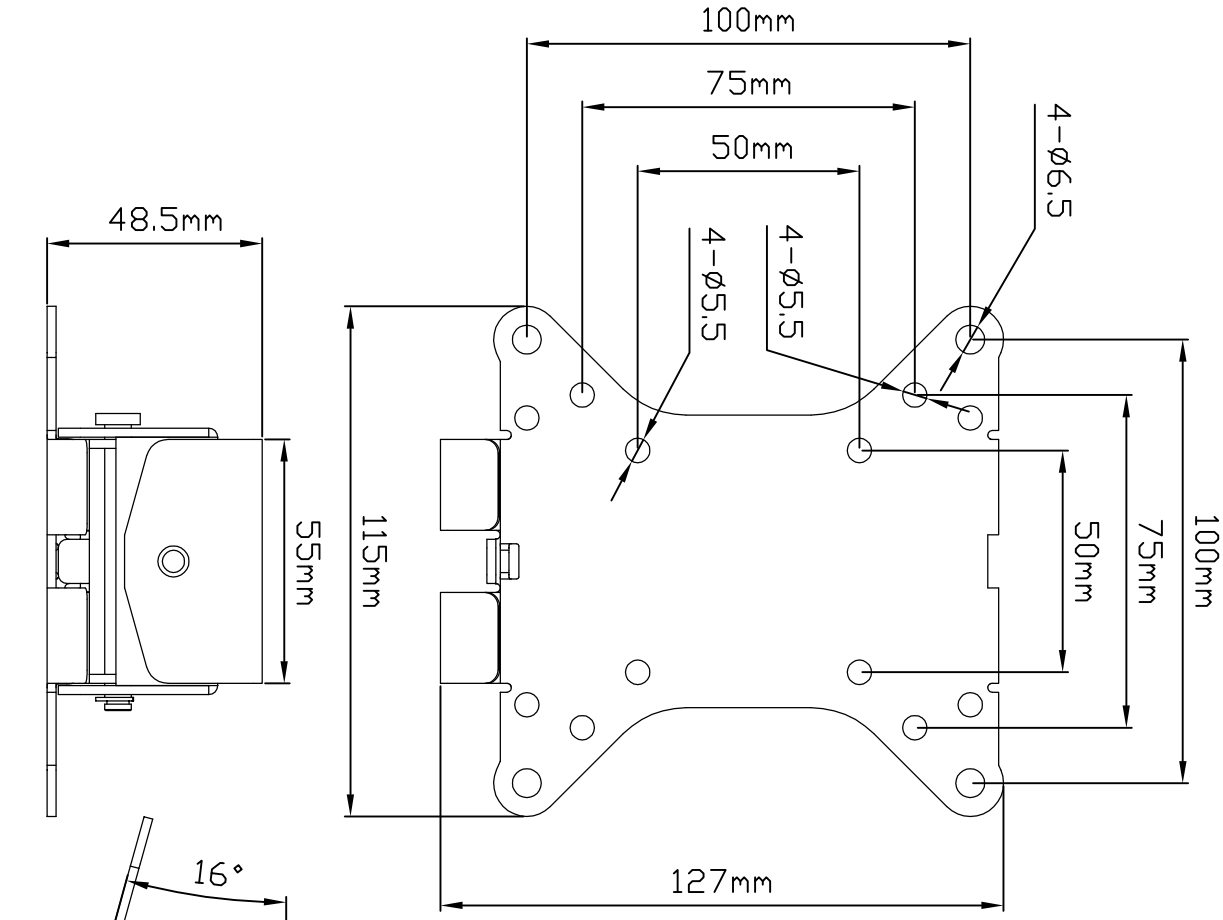
100mm
75mm
50mm
4-ø6.5
4-ø5.5
4-ø5.5
100mm
75mm
50mm
127mm
115mm
48.5mm
55mm

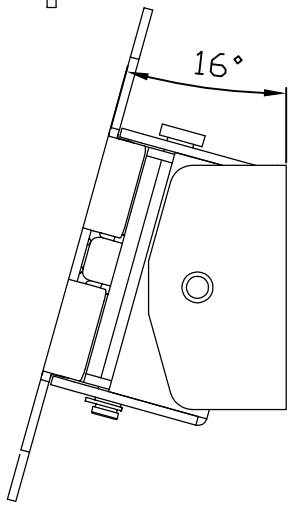
16°

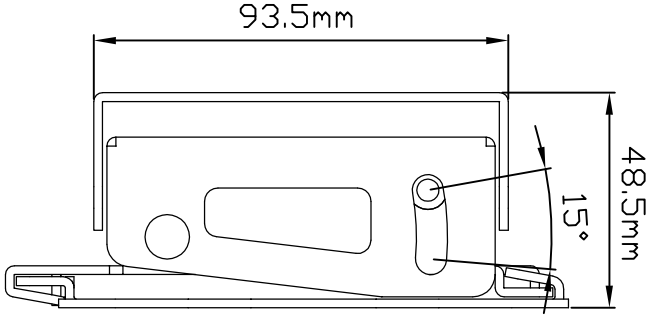
93.5mm
48.5mm
15°

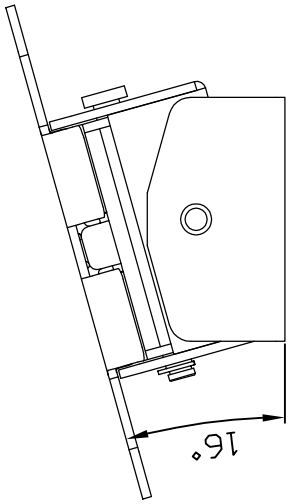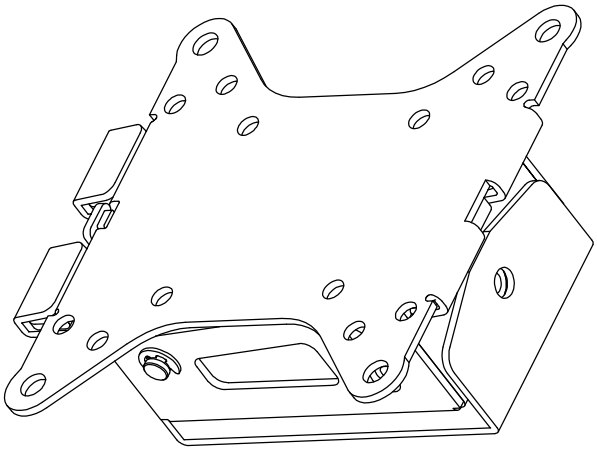
16°