VFM-DAD3 & VFM-DAD3B

vav.link/vfm-dad3/
vav.link/vfm-dad3b/

(A) CLAMP TO TABLE

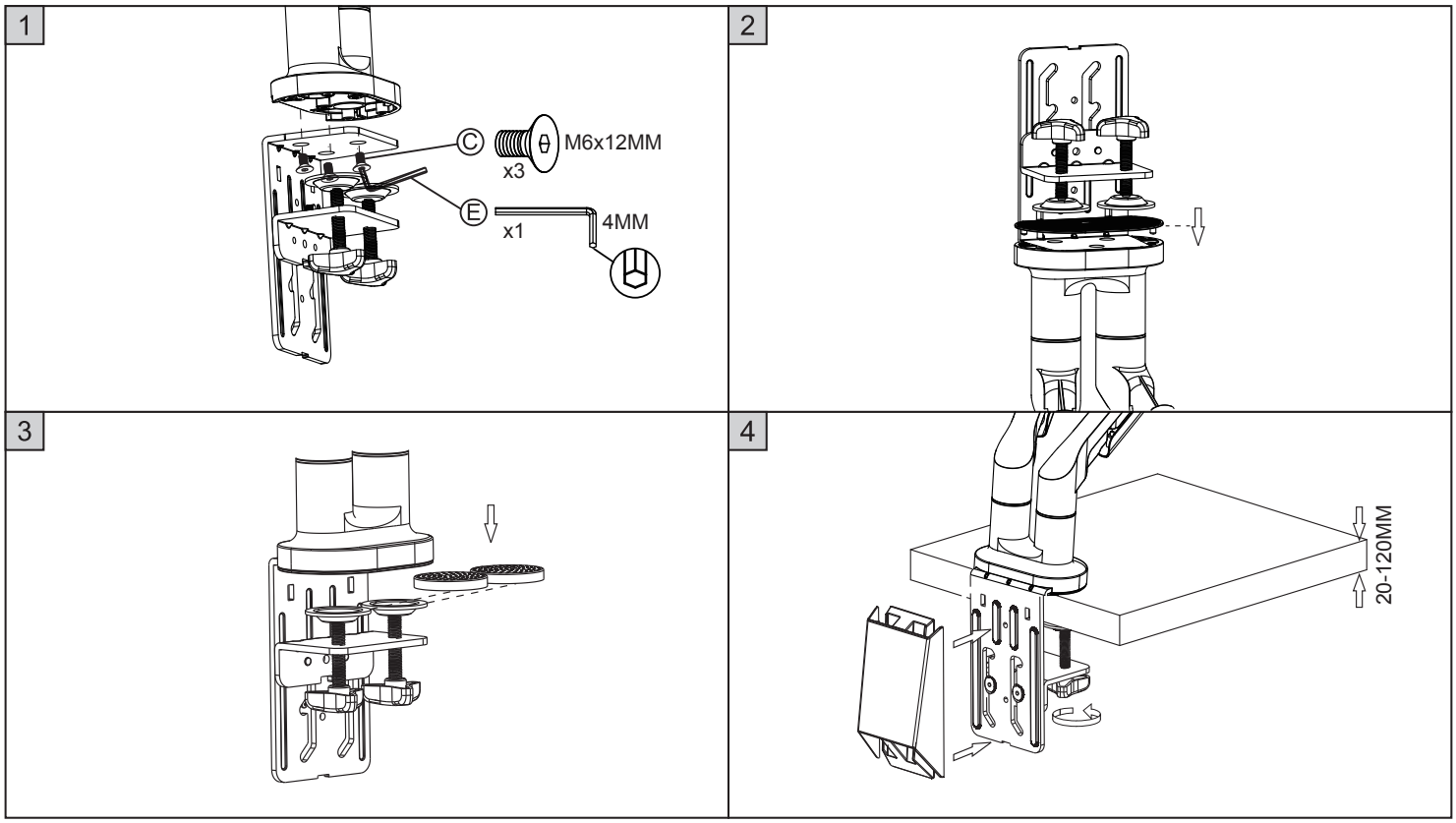

(B) DRILL INTO TABLE

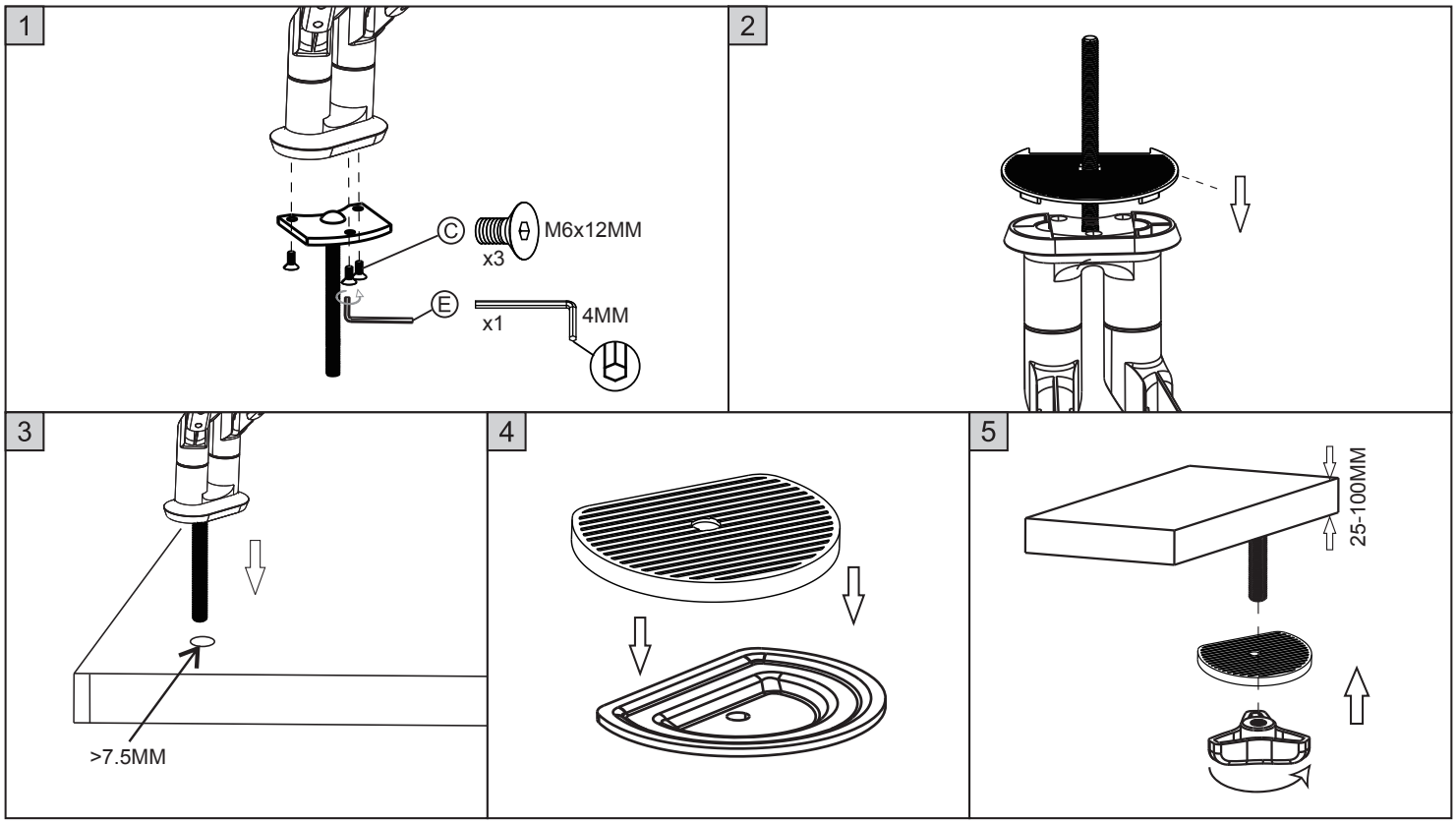

6

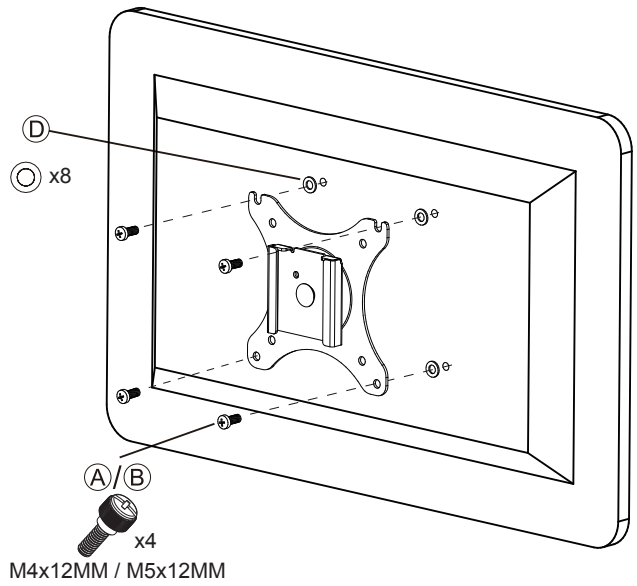

7

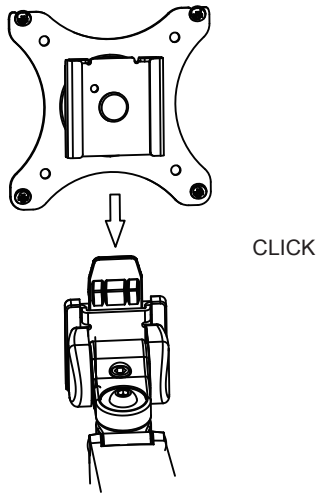

8

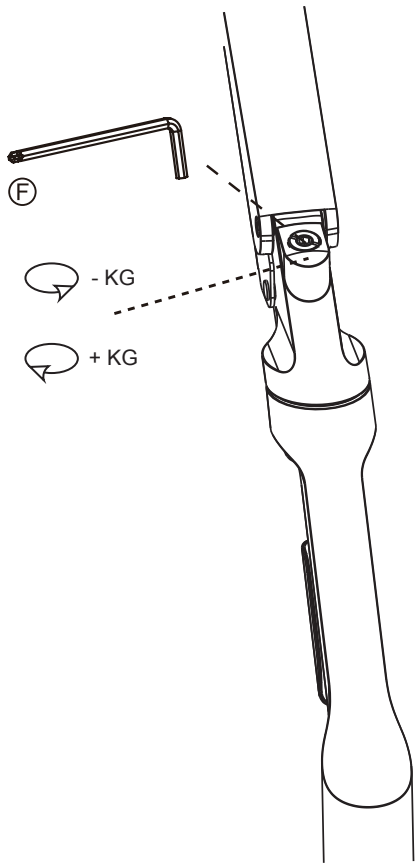
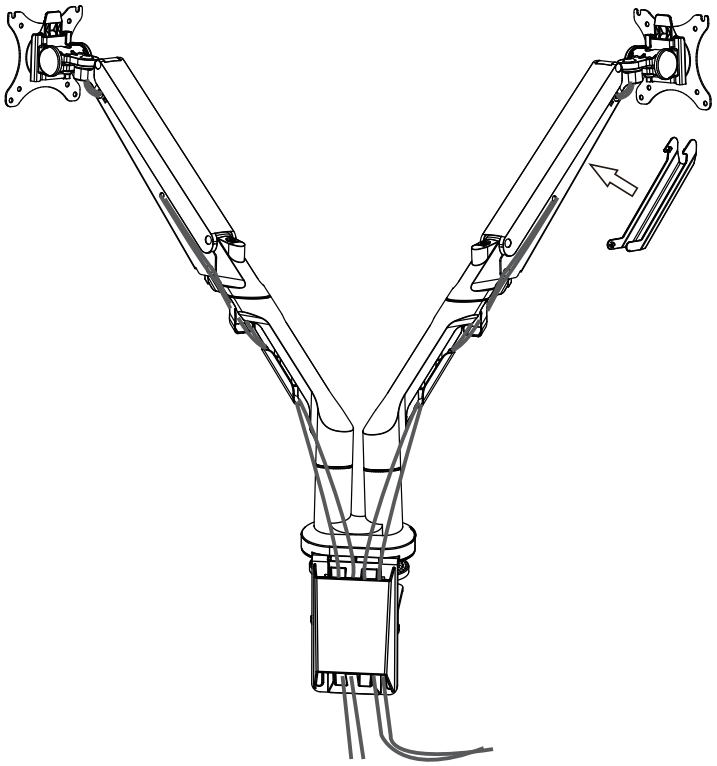
9